BILL OF MATERIAL (CURRENT LEVEL)

ITEM	PT/ASSY	DESCRIPTION	TYPE	QTY.
1	1-240	HARDWARE PACK	ASSEMBLY	2
2	10888	2.5MM ALLOY STEEL HEX KEY	PART	1
3	91488	CLEAR VINYL WASHER	PART	2
4	91611	CLEAR VINYL SPACER	PART	2
5	92308	M5X5 SET SCREW STAINLESS STEEL	PART	2
6	1134P	POST	PART	2
7	11XX	MOUNTING BRACKET	PART	2
8	1500C	TOWEL SHELF ROSETTE	PART	2
9	34N	CAP NUT	PART	2
10	34S	FINISHING SCREW	PART	2

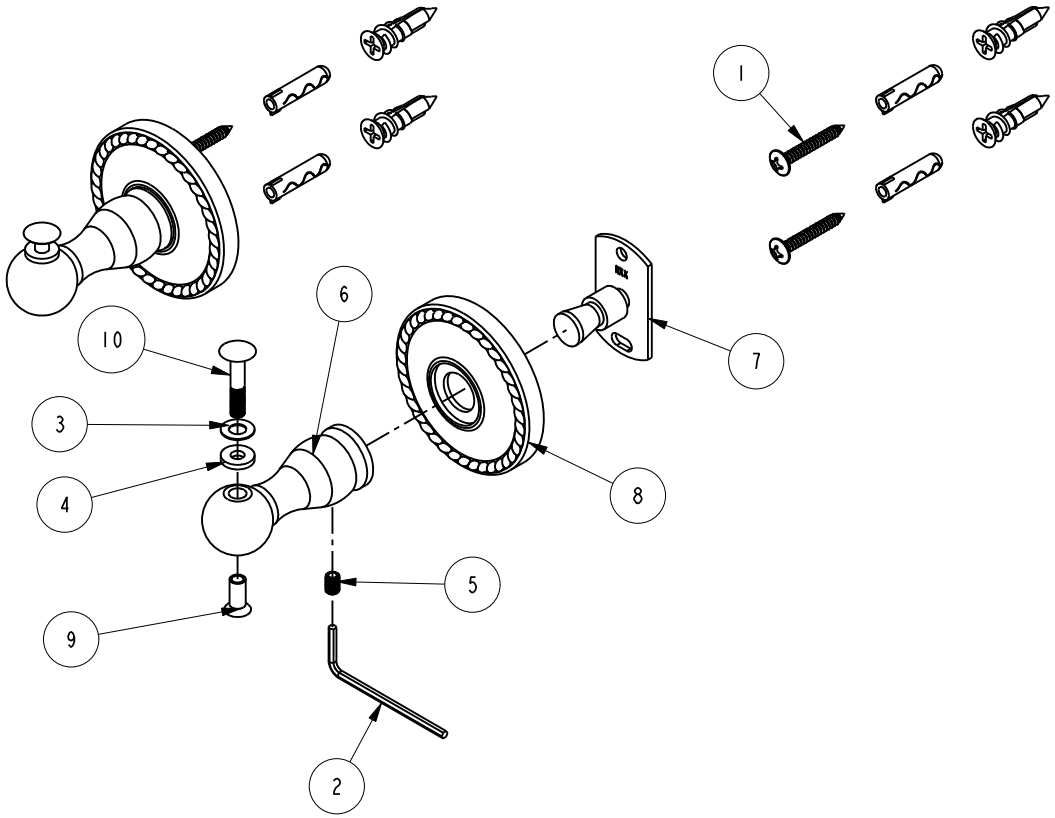

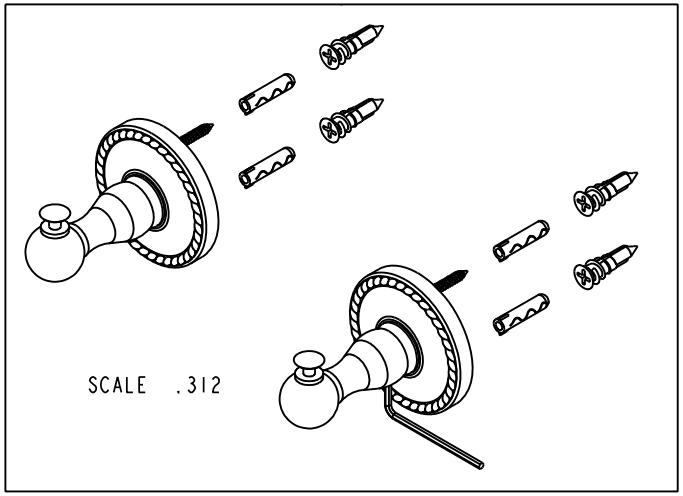

Ray Smith

Digitally signed by Ray Smith
DN: cn=Ray Smith, o=Brasstech, ou=Masco, email=rsmith@brasstech.com, c=US
Date: 2013.02.12 13:22:21 -05'00'

COPYRIGHT 2005 GINGER. THESE DRAWINGS AND THE DESIGNS DEPICTED HEREIN ARE THE PROPRIETARY PROPERTY OF GINGER. ANY USE OR REPRODUCTION IS SUBJECT TO THE EXPRESS APPROVAL OF GINGER. UNAUTHORIZED USE IS STRICTLY PROHIBITED. ALL RIGHTS RESERVED.

GINGER
2001 CARNEGIE AVE.
SANTA ANA CA 92705
(949) 417-5207

CANTERBURY SHELF BRACKETS, PAIR

ASSY. NO. 1534B

SCALE .375 | REF. *** | SHEET 1 OF 2

REV	REV DESC	DATE
A	EN-2397	12/28/12

SPECIFICATION DWG

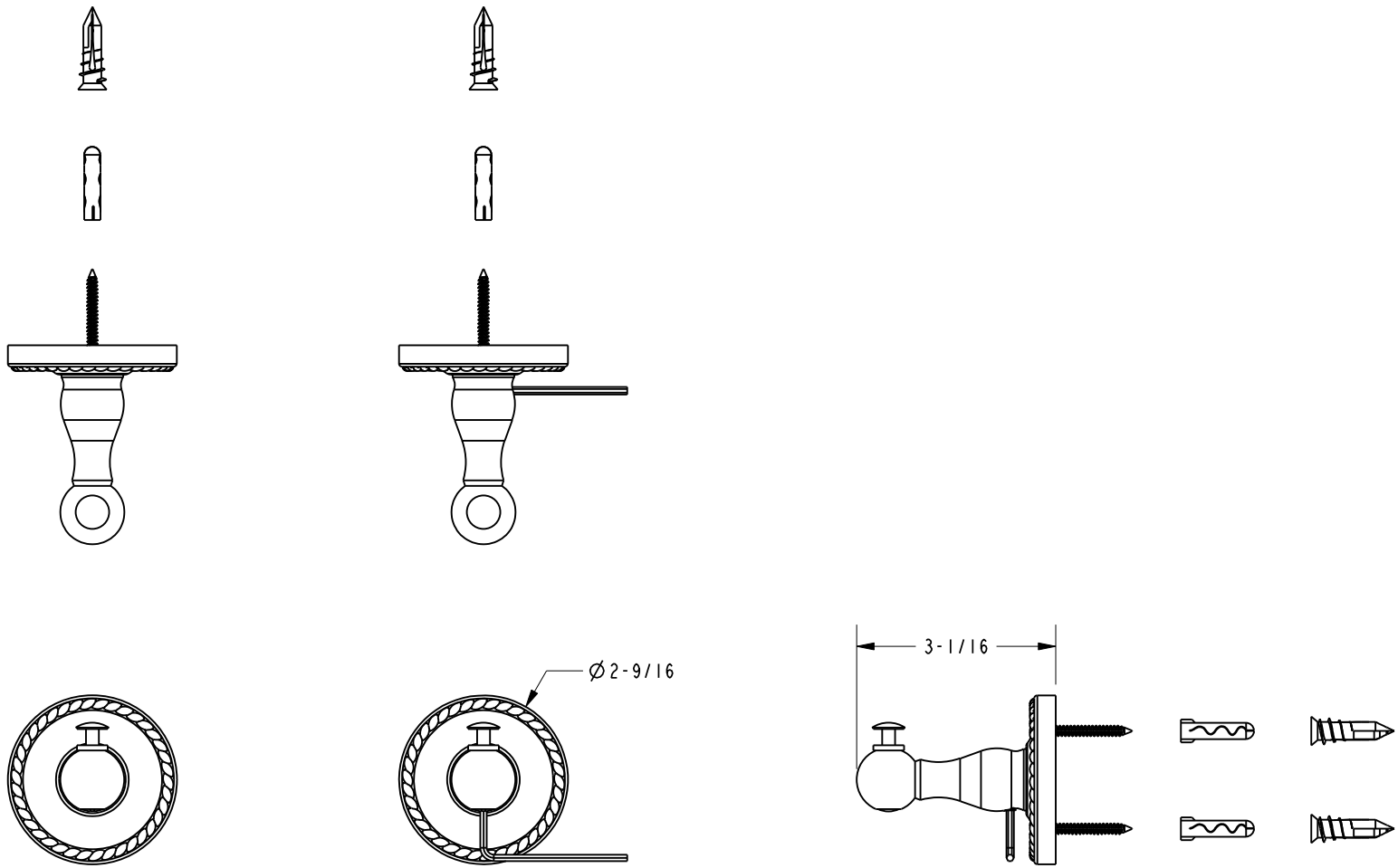

DIMENSIONS ARE IN INCHES AND AN APPROXIMATION OF A TYPICAL INSTALLATION

COPYRIGHT 2005 GINGER. THESE DRAWINGS AND THE DESIGNS DEPICTED HEREIN ARE THE PROPRIETARY PROPERTY OF GINGER. ANY USE OR REPRODUCTION IS SUBJECT TO THE EXPRESS APPROVAL OF GINGER. UNAUTHORIZED USE IS STRICTLY PROHIBITED. ALL RIGHTS RESERVED.

GINGER
2001 CARNEGIE AVE.
SANTA ANA CA 92705
(949) 417-5207

DWG NO.	REV
1534B	A

SCALE	REF.	SHEET
.375	***	2 OF 2