NOTES:

1. TO INSPECT ASSEMBLY, FOLLOW FIRST ARTICLE AND IN PROCESS INSPECTION SHEET.

2. APPLY LOCTITE 680 TO THREADS

BILL OF MATERIAL (CURRENT LEVEL)

ITEM	PT/ASSY	DESCRIPTION	TYPE	QTY.
1	30XX	MOUNTING BRACKET - SHORT	PART	2
2	1-206	HARDWARE PACK	ASSEMBLY	2
3	80775	BACKPLATE	PART	2
4	80445	TOWEL BAR AND TOILET TISSUE HOLDER POST	PART	2
5	92938	SCRW, M4 X .7 X 8 SKT FLT HD SS	PART	4
6	8-166	24" BAR	ASSEMBLY	1
7	92939	SCRW, M5 X .8 X 10 SKT LOW PROFILE CAP HD SS	PART	2
8	92308	SCRW, M5 X 5 SKT HD CUP PT W/ SELF LOC SS	PART	2
9	10888	HEX KEY, 2.5MM ALLOY STEEL	PART	1

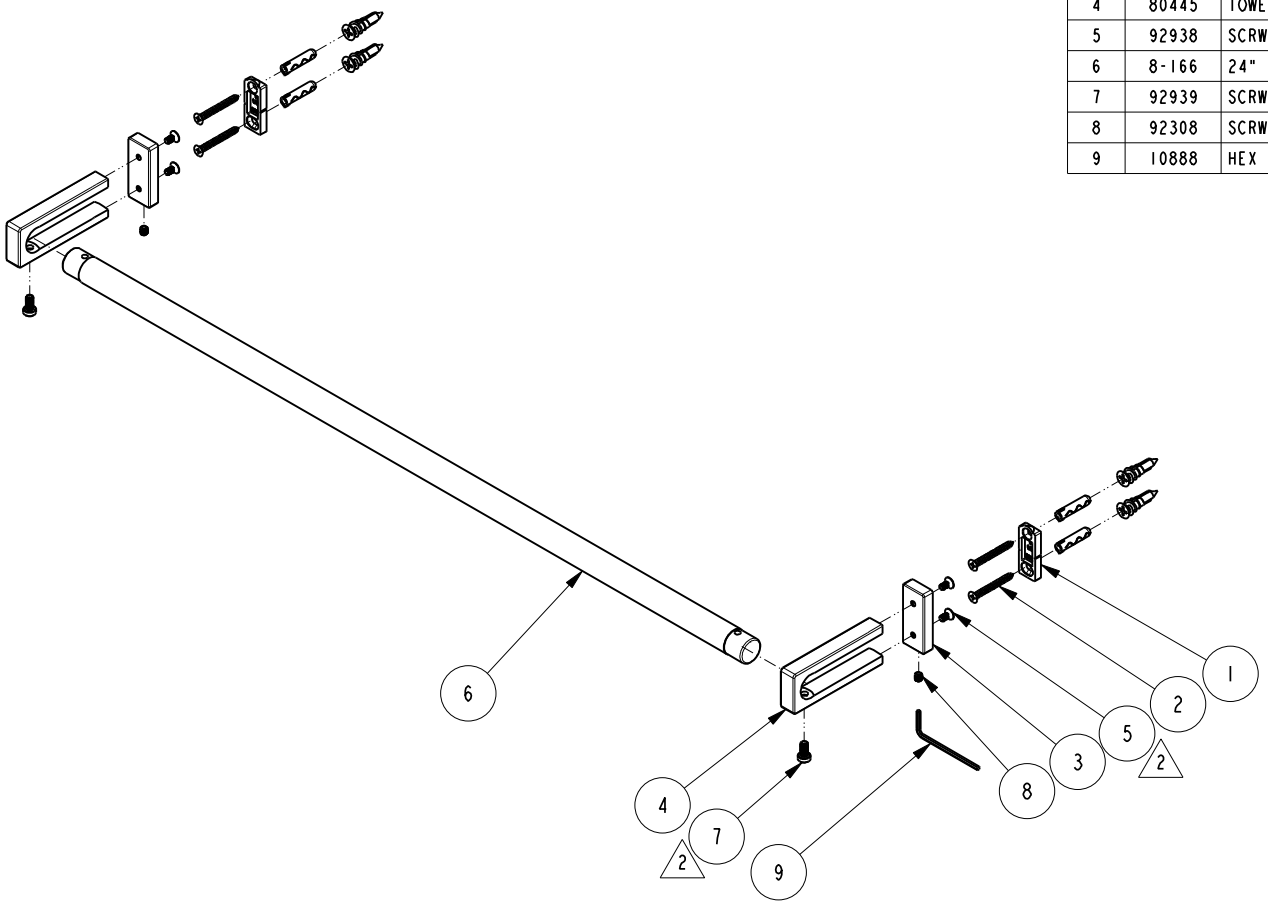

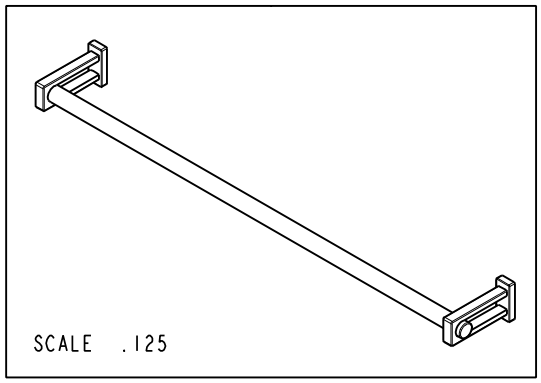

Ray Smith Digitally signed by Ray Smith Date: 2021.12.20 13:11:27 -05'00'

ZONE	REV	DESCRIPTION	DATE	APPROVED
-	C	EN-4417	11/16/21	R.S.

COPYRIGHT 2005 BRASSTECH, INC. THESE DRAWINGS AND THE DESIGNS DEPICTED HEREIN ARE THE PROPRIETARY PROPERTY OF BRASSTECH. ANY USE OR REPRODUCTION IS SUBJECT TO THE EXPRESS APPROVAL OF BRASSTECH. UNAUTHORIZED USE IS STRICTLY PROHIBITED. ALL RIGHTS RESERVED.

		-	-
TESTING	-	-	-
ASSEMBLY	-	-	-
PLATING	-	-	-
POLISHING	-	NEXT ASSY	USED ON
MACHINING	-	APPLICATION	
TOOLING FIXTURE #		REMOVE ALL BURRS AND SHARP EDGES	

UNITS ARE: INCHES [MM]
TOLERANCES ARE:
FRACTIONS ±1/16" DECIMALS .X ±.1 [2,5] .XX ±.06 [1,5] ANGLES ±1°
(X.XXX) DENOTES CRITICAL DIMS.
ALL THREADS ARE CRITICAL

DRAWN	JINSON	11/16/21
CHECKED	R.S.	11/16/21
APPROVED	R.S.	11/16/21

BRASSTECH INCORPORATED
2001 CARNEGIE AVE.
SANTA ANA, CA 92705
(949) 417-5207

24" TOWEL BAR

DWG NO. 3003 REV C

SCALE .200 REF. - SHEET 1 OF 2

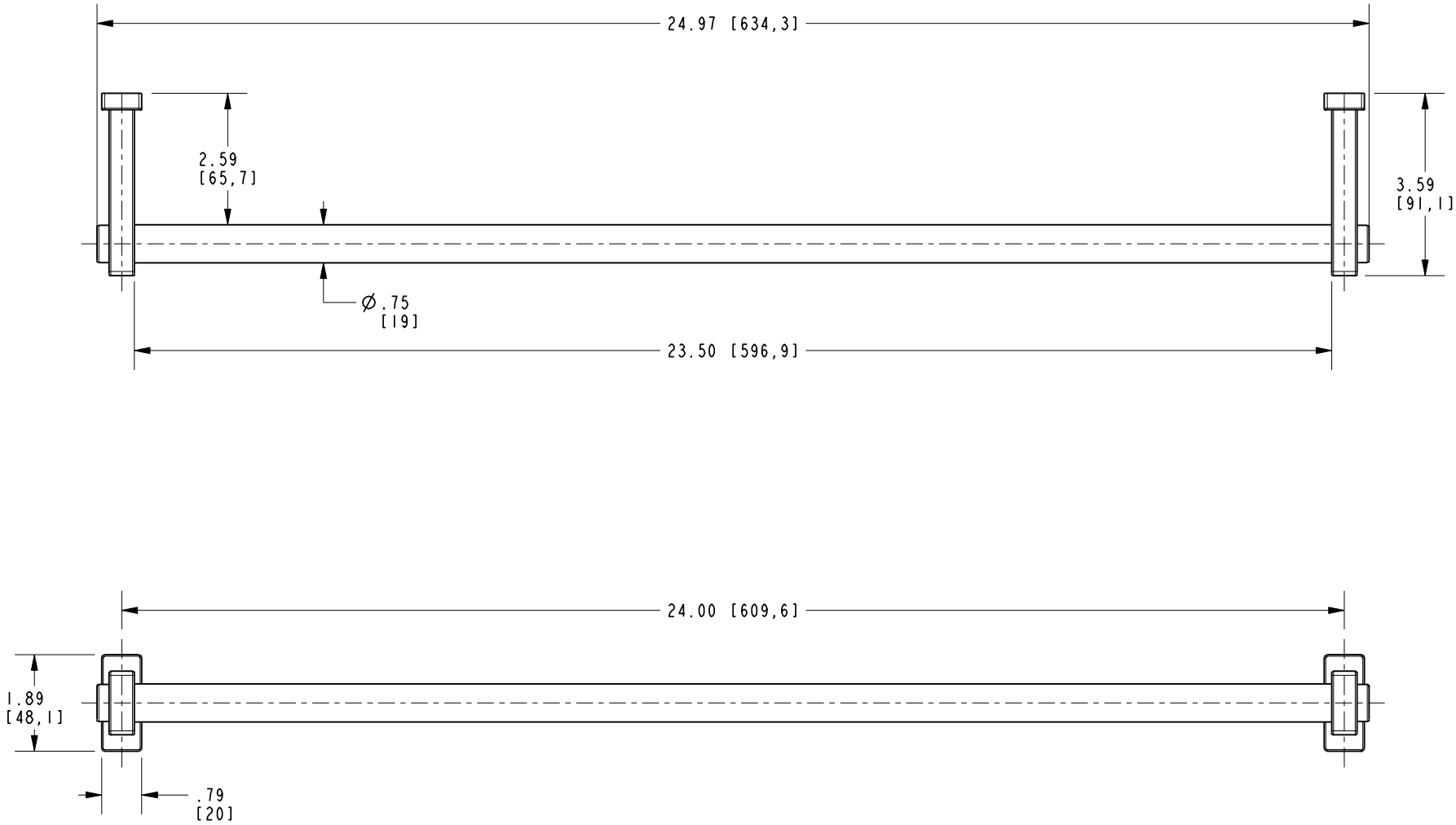

BRASSTECH INCORPORATED

2001 E. CARNEGIE AVE.
SANTA ANA, CA 92705
(949) 417-5207

DWG NO.	REV
3003	C

SCALE	REF.	SHEET
.325	-	2 OF 2