NOTES:

1. TO INSPECT ASSEBMLY, FOLLOW FIRST ARTICLE AND IN PROCESS INSPECTION SHEET.

2 APPLY ADHESIVE LOCTITE 680 OR EQUIVALENT.

## BILL OF MATERIAL (CURRENT LEVEL)

| ITEM | PT/ASSY | DESCRIPTION | TYPE | QTY. |
|---|---|---|---|---|
| 1 | 2795 | ROUND MOUNTING FLANGE | PART | 2 |
| 2 | 80549 | GRAB BAR END POST | PART | 2 |
| 3 | 80548 | COLUMNAR GRAB BAR TRIM RING | PART | 2 |
| 4 | 92385 | WASHER, M8 HIGH COLLAR SPRING SS | PART | 2 |
| 5 | 92387 | SCRW, M8 X 1 X 40 SKT HD CAP SS | PART | 2 |
| 6 | 80550 | GRAB BAR END FLANGE | PART | 2 |
| 7 | 92388 | GRAB BAR TUBE INSERT | PART | 2 |
| 8 | 80534 | 1-1/4" GRAB BAR TUBE | PART | 1 |
| 9 | 1-227 | GRAB BAR HARDWARE PACK | ASSEMBLY | 2 |
| 10 | 91496 | O-RING, 2.5 X 40MM ID, EPDM, 65-75 DURO | PART | 2 |

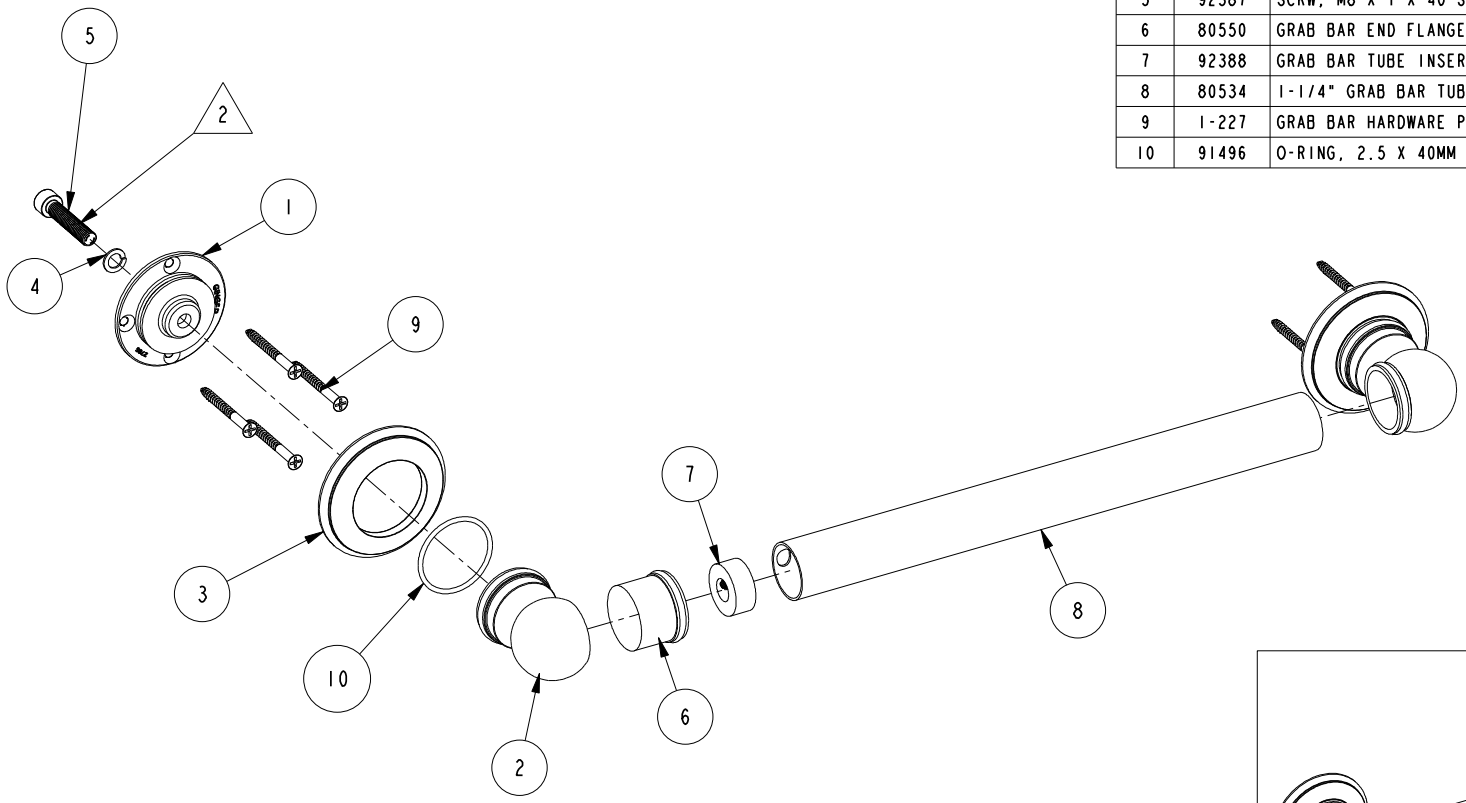


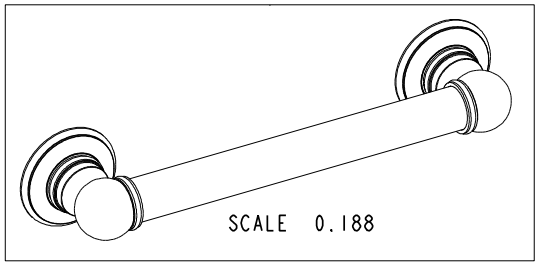


| ZONE | REV | DESCRIPTION | DATE | APPROVED |
|---|---|---|---|---|
| - | B | EN-4300i | 06/15/21 | J.M. |
| - | A | EN-1398 | 11/20/09 | R.S. |
| - | - | RELEASED | - | - |

COPYRIGHT 2005 BRASSTECH, INC. THESE DRAWINGS AND THE DESIGNS DEPICTED HEREIN ARE THE PROPRIETARY PROPERTY OF BRASSTECH. ANY USE OR REPRODUCTION IS SUBJECT TO THE EXPRESS APPROVAL OF BRASSTECH. UNAUTHORIZED USE IS STRICTLY PROHIBITED. ALL RIGHTS RESERVED.

| | | | |
|---|---|---|---|
| TESTING | - | - | - |
| ASSEMBLY | - | - | - |
| PLATING | - | - | - |
| POLISHING | - | NEXT ASSY | USED ON |
| MACHINING | - | APPLICATION | |
| TOOLING FIXTURE # | | REMOVE ALL BURRS AND SHARP EDGES | |

UNITS ARE: INCHES [MM]
TOLERANCES ARE:
FRACTIONS ±1/16" DECIMALS .X ±.1 [2.5] .XX ±.06 [1.5] ANGLES ±1°
(X.XXX) DENOTES CRITICAL DIMS.
ALL THREADS ARE CRITICAL

| | | |
|---|---|---|
| DRAWN | - | - |
| CHECKED | - | - |
| APPROVED | - | - |

BRASSTECH INCORPORATED
2001 CARNEGIE AVE.
SANTA ANA, CA 92705
(949) 417-5207

# 12" GRAB BAR

DWG NO. 4560 REV B

SCALE 0.250 REF. - SHEET 1 OF 2

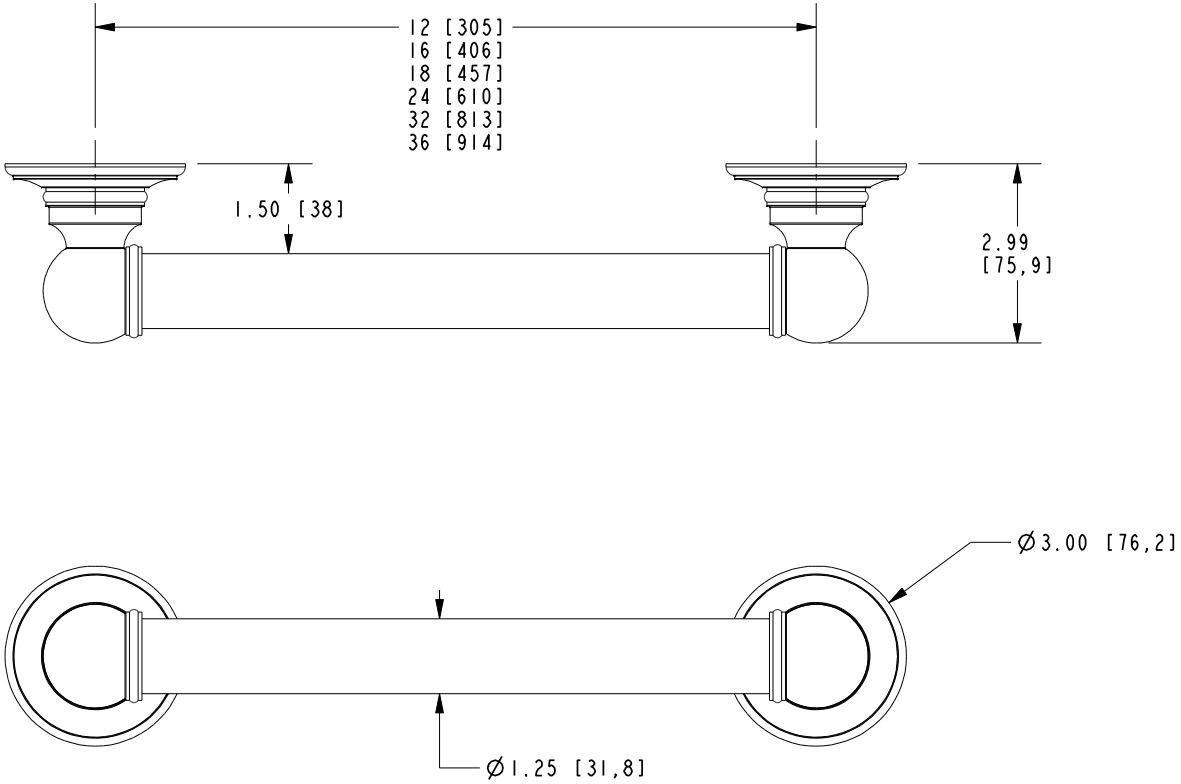


BRASSTECH
INCORPORATED
2001 E. CARNEGIE AVE.
SANTA ANA, CA 92705
(949) 417-5207

| DWG NO. | REV |
|---|---|
| 4560 | B |

| SCALE | REF. | SHEET |
|---|---|---|
| 0.313 | - | 2 OF 2 |