NOTES:

(N1) 1. FIT / FORM / FUNCTION SHALL FOLLOW PS-E.008.

BILL OF MATERIAL (CURRENT LEVEL)

ITEM	PT/ASSY	DESCRIPTION	TYPE	QTY.
1	7-682	SPARE TISSUE HOLDER ARM	ASSEMBLY	1
2	02XXG	MOUNTING BRACKET	PART	1
3	1-206	HARDWARE PACK	ASSEMBLY	1
4	92031	SCRW, M6 X 1 X 6 SKT HD CUP PT W/ SELF LOC SS	PART	1
5	10615	HEX KEY, 3MM ALLOY STEEL	PART	1

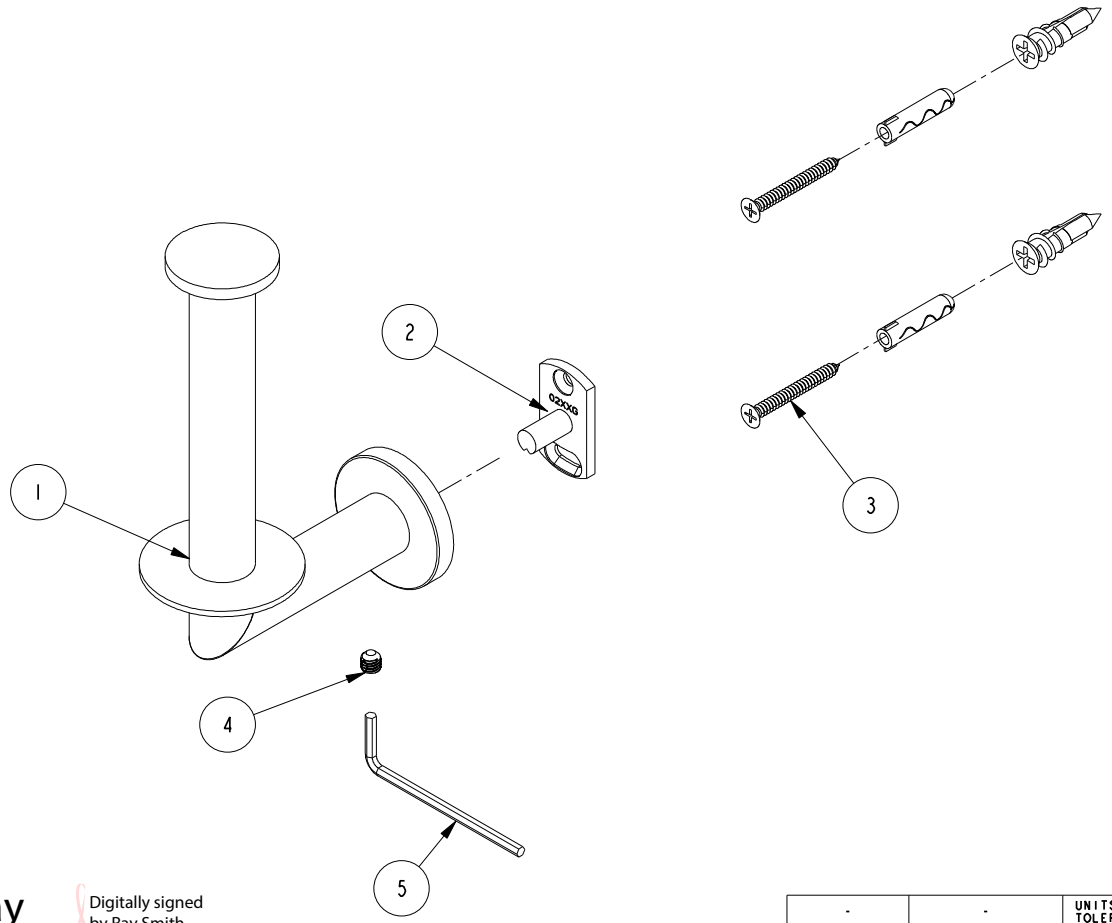

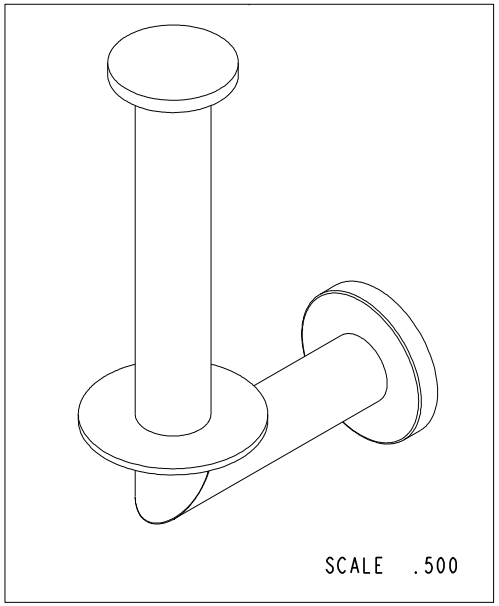

Ray Smith
Digitally signed by Ray Smith
Date: 2020.04.16 13:20:54 -04'00'

ZONE	REV	DESCRIPTION	DATE	APPROVED
-	B	EN-4150	03/31/20	R.S.
-	A	EN-4032	12/02/19	R.S.
-	-	EN-0995-1	11/10/10	J.M.

COPYRIGHT 2005 BRASSTECH, INC. THESE DRAWINGS AND THE DESIGNS DEPICTED HEREIN ARE THE PROPRIETARY PROPERTY OF BRASSTECH. ANY USE OR REPRODUCTION IS SUBJECT TO THE EXPRESS APPROVAL OF BRASSTECH. UNAUTHORIZED USE IS STRICTLY PROHIBITED. ALL RIGHTS RESERVED.

		-	-
TESTING	-	-	-
ASSEMBLY	-	-	-
PLATING	-	-	-
POLISHING	-	NEXT ASSY	USED ON
MACHINING	-	APPLICATION	
TOOLING FIXTURE #		REMOVE ALL BURRS AND SHARP EDGES	

UNITS ARE: INCHES [MM]
TOLERANCES ARE:
FRACTIONS ±1/16" DECIMALS .X ±.1 [2.5] .XX ±.06 [1.5] ANGLES ±1°
(X.XXX) DENOTES CRITICAL DIMS.
ALL THREADS ARE CRITICAL

DRAWN	R.S.	11/10/10
CHECKED	J.M.	11/10/10
APPROVED	J.M.	11/10/10

BRASSTECH INCORPORATED
2001 CARNEGIE AVE.
SANTA ANA, CA 92705
(949) 417-5207

SPARE TISSUE HOLDER ASM

DWG NO. 4607 REV B

SCALE .438 REF. - SHEET 1 OF 2

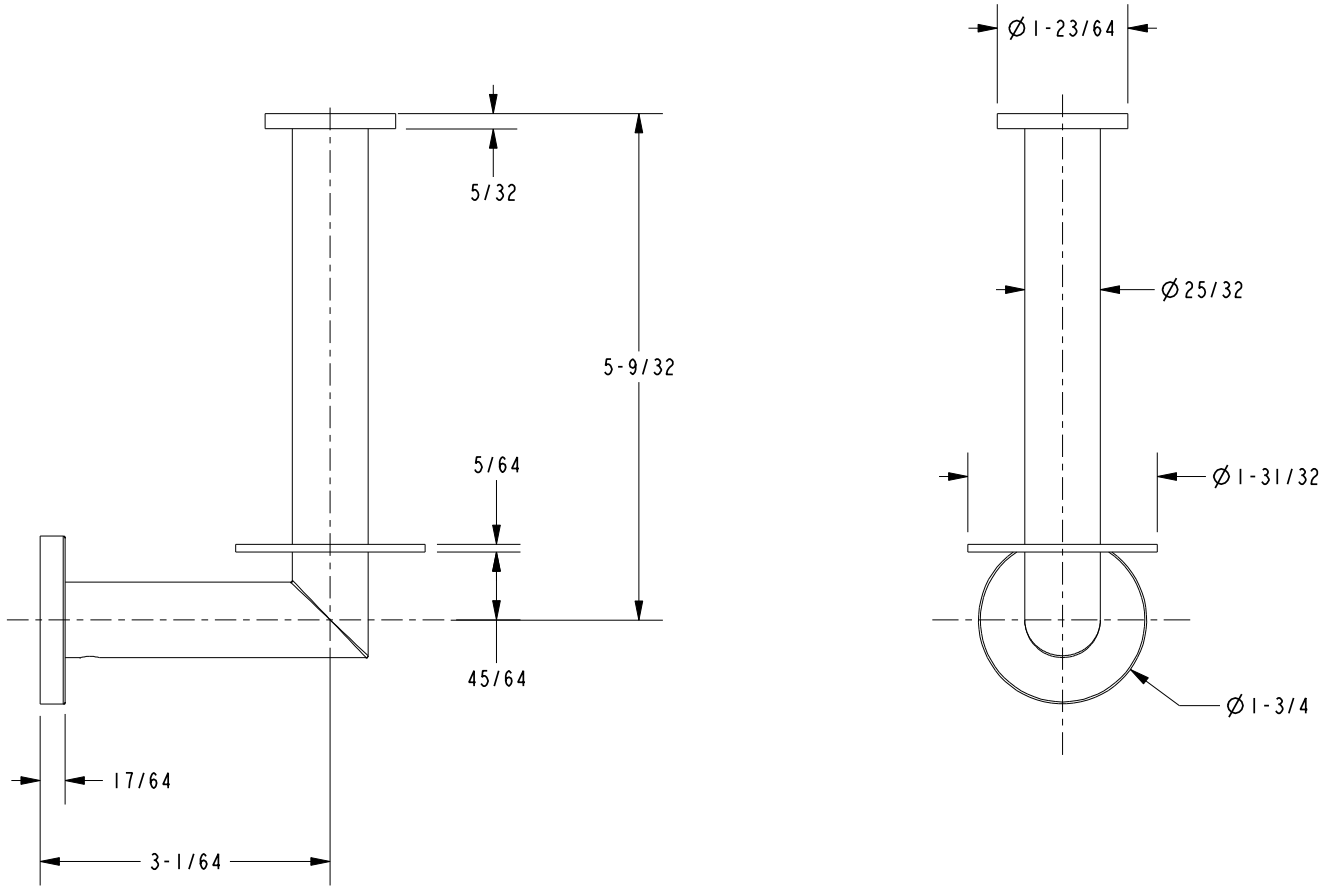

BRASSTECH INCORPORATED

2001 E. CARNEGIE AVE.
SANTA ANA, CA 92705
(949) 417-5207

DWG NO.	REV
4607	B

SCALE	REF.	SHEET
.500	-	2 OF 2