NOTES:

1. TO INSPECT ASSEBMLY, FOLLOW FIRST ARTICLE AND IN PROCESS INSPECTION SHEET.
2. APPLY LOCTITE 680

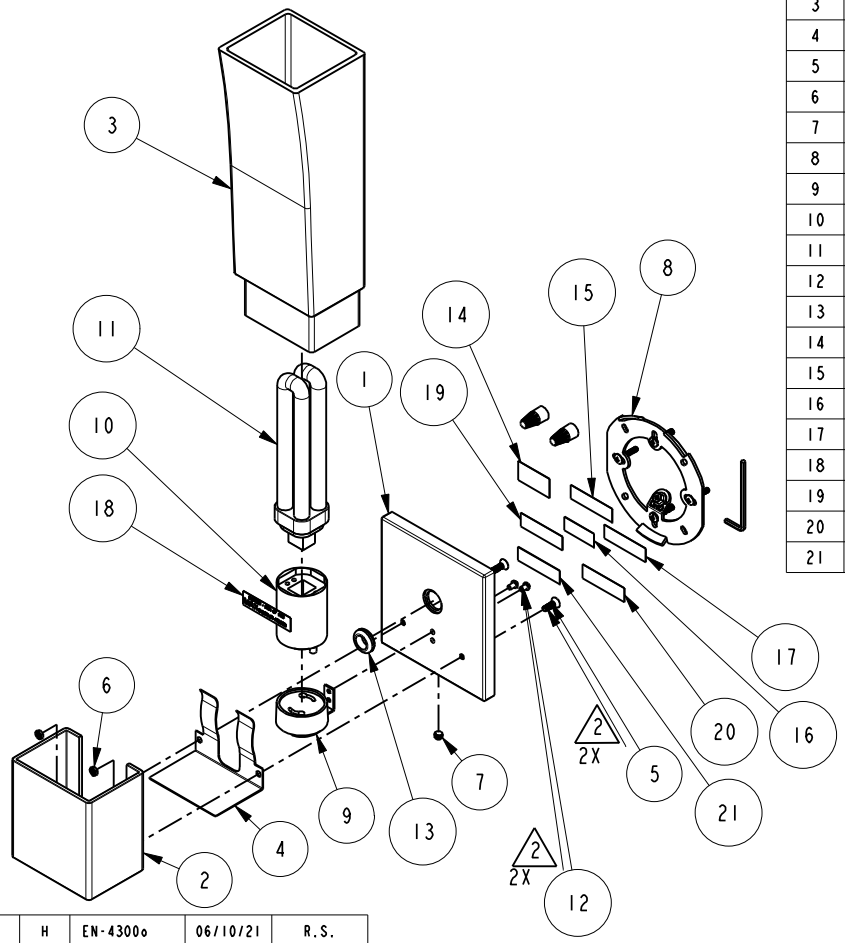

BILL OF MATERIAL (CURRENT LEVEL)

ITEM	PT/ASSY	DESCRIPTION	TYPE	QTY.
1	40410	LIGHT BASE	PART	1
2	40411	LIGHT COVER	PART	1
3	40409	GLASS SHADE	PART	1
4	40436	BOTTOM COVER / SPRING CLIP	PART	1
5	92246	SCRW, 8-32 X 1/2 SKT FLT HD SS	PART	2
6	92169	NUT 8-32 x 5/16 STL	PART	2
7	92461	SCRW, M6 X 1 X 6 SKT HD CONE PT SS	PART	1
8	1-241	HARDWARE PACK	ASSEMBLY	1
9	91531	GU-24 BASE LAMPHOLDER -QUICK CONNECT	PART	1
10	91532	GU-24 SOCKET SELF BALLASTED LAMPHOLDER -QUICK CONNECT	PART	1
11	91513	18W, 4-Pin (G24Q-2) BASE, COMPACT FLUORESCENT LAMP, 2700K WARM WHITE COLOR	PART	1
12	92047	SCRW, 6-32 X 1/4 SLT RD HD SS	PART	2
13	91033	GROMMET	PART	1
14	98006	LABEL, UL LISTED	PART	1
15	98069	LABEL, PNXXX, SUITABLE FOR DAMP LOCATIONS	PART	1
16	98070	LABEL, MONTH YEAR E191501	PART	1
17	98081	LABEL, 120V / 60H / 18W	PART	1
18	98139	LABEL, 18 WATT MAX CFL PERMITTED	PART	1
19	98012	LABEL, WALL MOUNT ONLY	PART	1
20	98088	LABEL, MIN 75 C SUPPLY CONDUCTORS	PART	1
21	98125	LABEL, ORIENTATION MARKING	PART	1

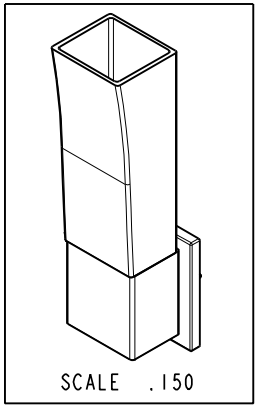

ZONE	REV	DESCRIPTION	DATE	APPROVED
-	H	EN-4300o	06/10/21	R.S.
-	G	EN-3176	10/31/16	J.M.
-	F	EN-3127	08/26/16	R.S
-	E	EN-2592	08/29/13	-
-	D	EN-2506	04/19/13	-
-	C	EN-1927	10/12/11	-
-	B	EN-1770	05/24/11	-
-	A	EN-1294	03/16/11	-
-	-	EN-1294	11/09/10	-

COPYRIGHT 2005 BRASSTECH, INC. THESE DRAWINGS AND THE DESIGNS DEPICTED HEREIN ARE THE PROPRIETARY PROPERTY OF BRASSTECH. ANY USE OR REPRODUCTION IS SUBJECT TO THE EXPRESS APPROVAL OF BRASSTECH. UNAUTHORIZED USE IS STRICTLY PROHIBITED. ALL RIGHTS RESERVED.

TESTING	-	-	-
ASSEMBLY	-	-	-
PLATING	-	-	-
POLISHING	-	NEXT ASSY	USED ON
MACHINING	-	APPLICATION	
TOOLING FIXTURE #		REMOVE ALL BURRS AND SHARP EDGES	

UNITS ARE: INCHES [MM]
TOLERANCES ARE:
FRACTIONS ±1/16" DECIMALS .X ±.1 [2,5] .XX ±.06 [1,5] ANGLES ±1°
(X.XXX) DENOTES CRITICAL DIMS.
ALL THREADS ARE CRITICAL

DRAWN	JINSON	06/10/21
CHECKED	R.S.	06/10/21
APPROVED	R.S.	06/10/21

BRASSTECH INCORPORATED
2001 CARNEGIE AVE.
SANTA ANA, CA 92705
(949) 417-5207

SINGLE LIGHT

DWG NO. 4781 REV H

SCALE .175 REF. - SHEET 1 OF 3

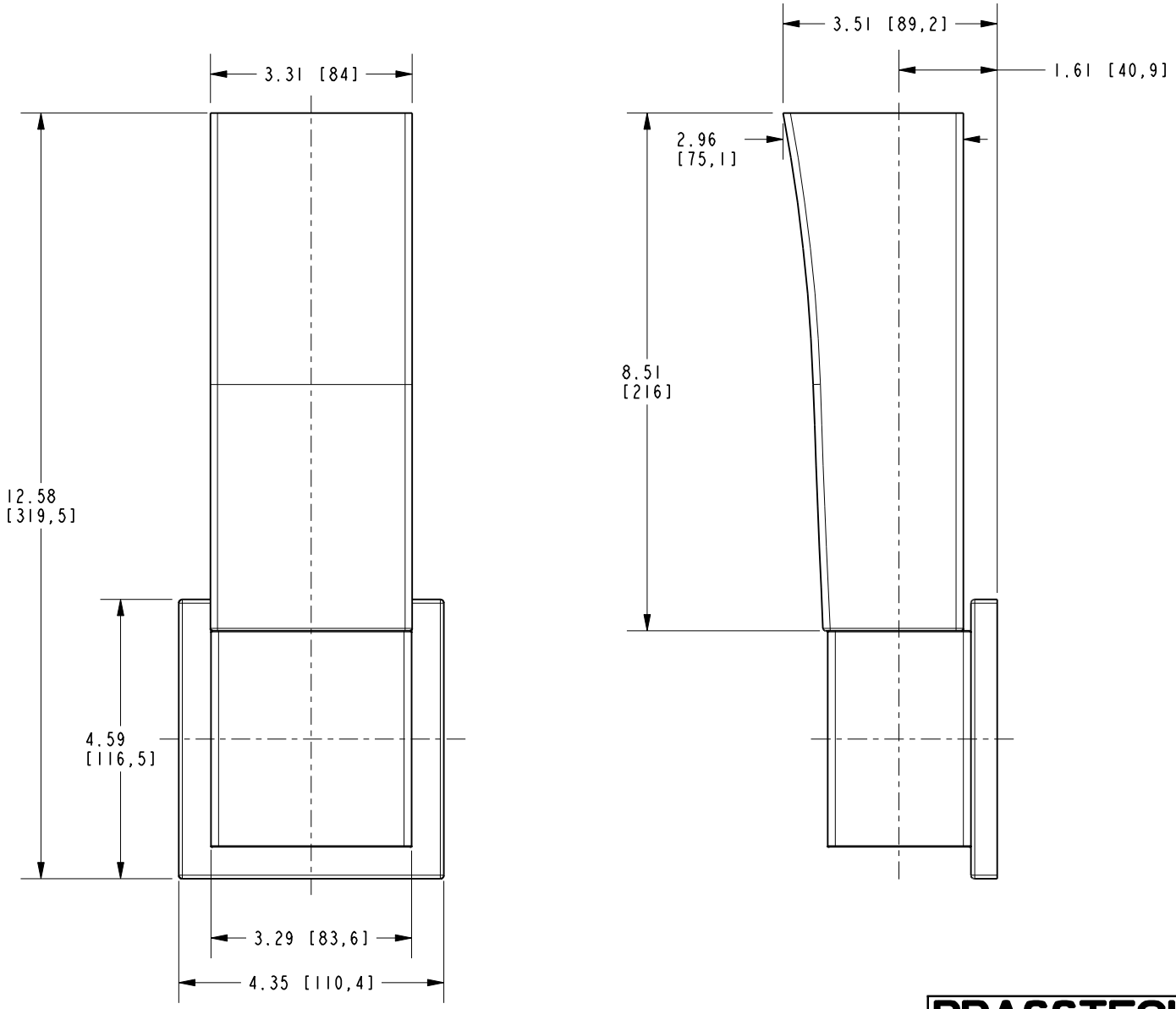

ADA COMPLIANT

BRASSTECH INCORPORATED
2001 E. CARNEGIE AVE.
SANTA ANA, CA 92705
(949) 417-5207

DWG NO.	REV
4781	H

SCALE	REF.	SHEET
.375	-	2 OF 3

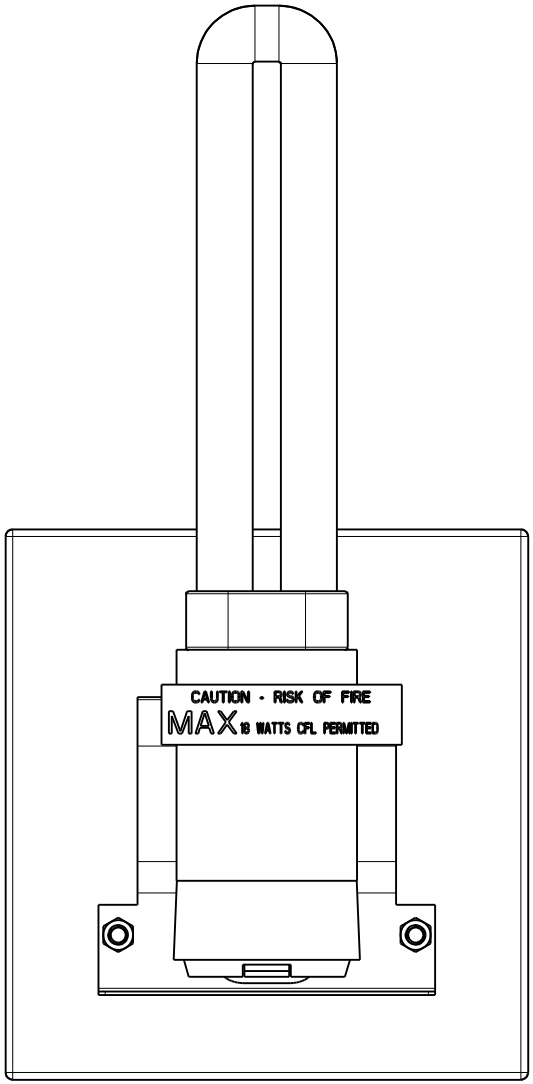

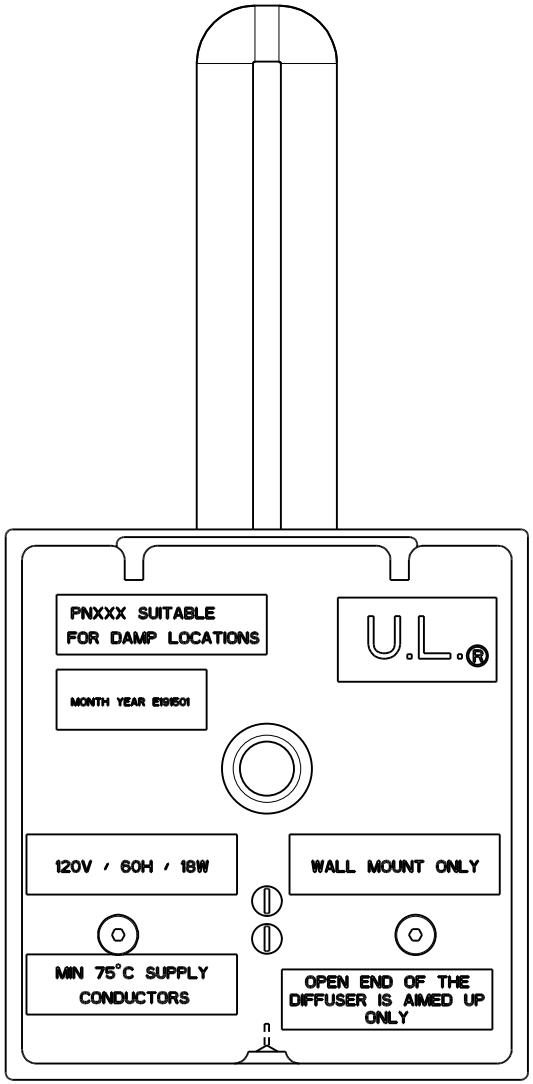

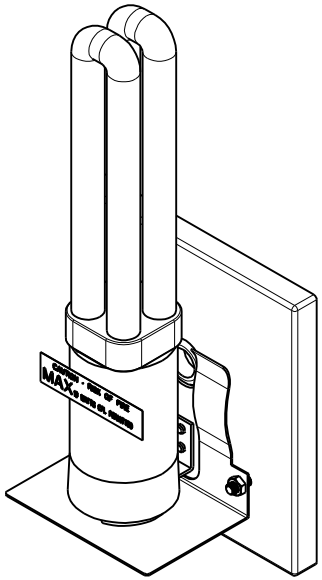

SCALE .375

BRASSTECH INCORPORATED	2001 E. CARNEGIE AVE. SANTA ANA, CA 92705 (949) 417-5207	
DWG NO. 4781		REV H
SCALE .625	REF. -	SHEET 3 OF 3