NOTES:

N1 1. FIT / FORM / FUNCTION SHALL FOLLOW PS-E.008.

N2 2. PLACE ITEM 1 IN SEPARATE BAG.

BILL OF MATERIAL (CURRENT LEVEL)

ITEM	PT/ASSY	DESCRIPTION	TYPE	QTY.
1	4BX	4BX HOTEL SHELF MOUNTING PACK	ASSEMBLY	1
2	40731	TOWEL SHELF ESCUTCHEON	PART	2

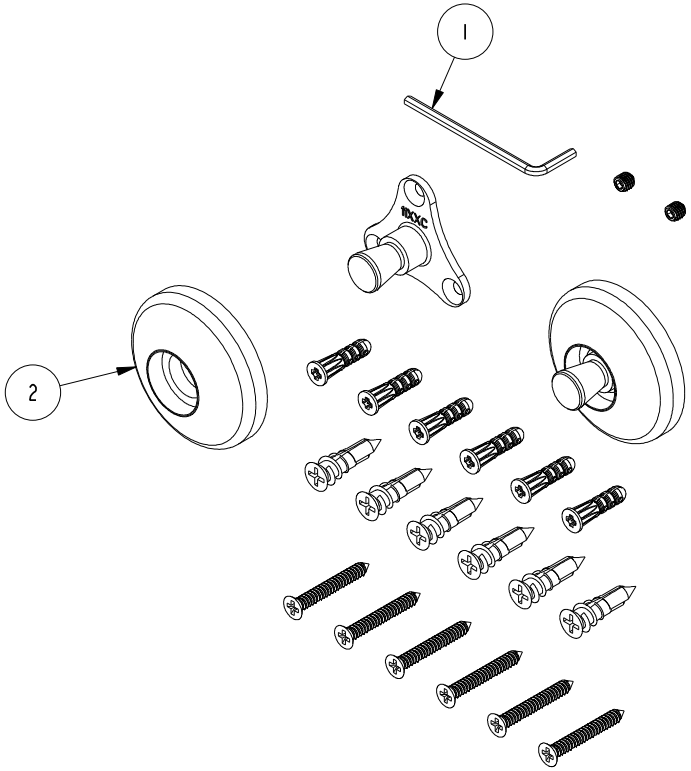

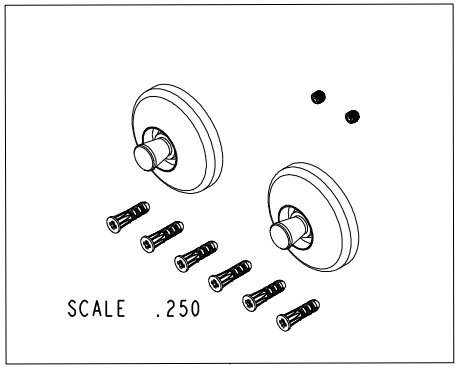

Joe Manga Digitally signed by Joe Manga Date: 2019.07.08 14:15:18 -07'00'

ZONE	REV	DESCRIPTION	DATE	APPROVED
-	-	EN-3841	06/21/19	J.M.

COPYRIGHT 2005 BRASSTECH, INC. THESE DRAWINGS AND THE DESIGNS DEPICTED HEREIN ARE THE PROPRIETARY PROPERTY OF BRASSTECH. ANY USE OR REPRODUCTION IS SUBJECT TO THE EXPRESS APPROVAL OF BRASSTECH. UNAUTHORIZED USE IS STRICTLY PROHIBITED. ALL RIGHTS RESERVED.

		-	-
TESTING	-	-	-
ASSEMBLY	-	-	-
PLATING	-	-	-
POLISHING	-	NEXT ASSY	USED ON
MACHINING	-	APPLICATION	
TOOLING FIXTURE #		REMOVE ALL BURRS AND SHARP EDGES	

UNITS ARE: INCHES [MM]
TOLERANCES ARE:
FRACTIONS ±1/16" DECIMALS .X ±.1 [2.5] .XX ±.06 [1.5] ANGLES ±1°
(X.XXX) DENOTES CRITICAL DIMS.
ALL THREADS ARE CRITICAL

DRAWN	R.S.	06/21/19
CHECKED	J.M.	06/21/19
APPROVED	J.M.	06/21/19

BRASSTECH INCORPORATED
2001 CARNEGIE AVE.
SANTA ANA, CA 92705
(949) 417-5207

HOTEL SHELF MOUNTING KIT

DWG NO. 564B REV -

SCALE .375 REF. - SHEET 1 OF 1