GINGER

CHELSEA

Single Light
1182-1

Features

- Solid brass construction
- Single-post, single light design
- UL listed for damp locations (U.S. and Canada)
- Max. 100 Watt Type A-19 bulb (not supplied) required.
- May be installed with shade facing upward or downward
- Complements Chelsea product series

Codes / Standards Compliance

Meets or exceeds the following at date of manufacture:

- UL Listed
- All applicable US Federal and State material regulations

Colors / Finishes

- ORB: Oil Rubbed Bronze
- PB: Polished Brass
- PC: Polished Chrome
- PN: Polished Nickel
- SN: Satin Nickel

Specified Model

Model	Description	Colors | Finishes
1182-1	Single Light, Satin-Etched Glass	☐ ORB ☐ PB ☐ PC ☐ PN ☐ SN

Replacement Parts

Model	Description	Colors | Finishes
1181-TG-E	Replacement Main Glass Shade, Satin-Etched Glass	☐ Satin-Etched Glass
1181-TG-N	Replacement Main Glass Shade, Nuage Glass	☐ Nuage Glass

Product Specification: **Add "Color / Finish" Suffix to Model Number Below**

The Single Light shall incorporate solid brass construction and a (satin-etched, nuage or satin opal) glass shade. Single Light shall complement Ginger Chelsea product series. Single Light shall be Ginger Model 1182-1___/____.

t: 949.417.5207 | www.gingerco.com

©2021 Brasstech, Inc.

1182-1

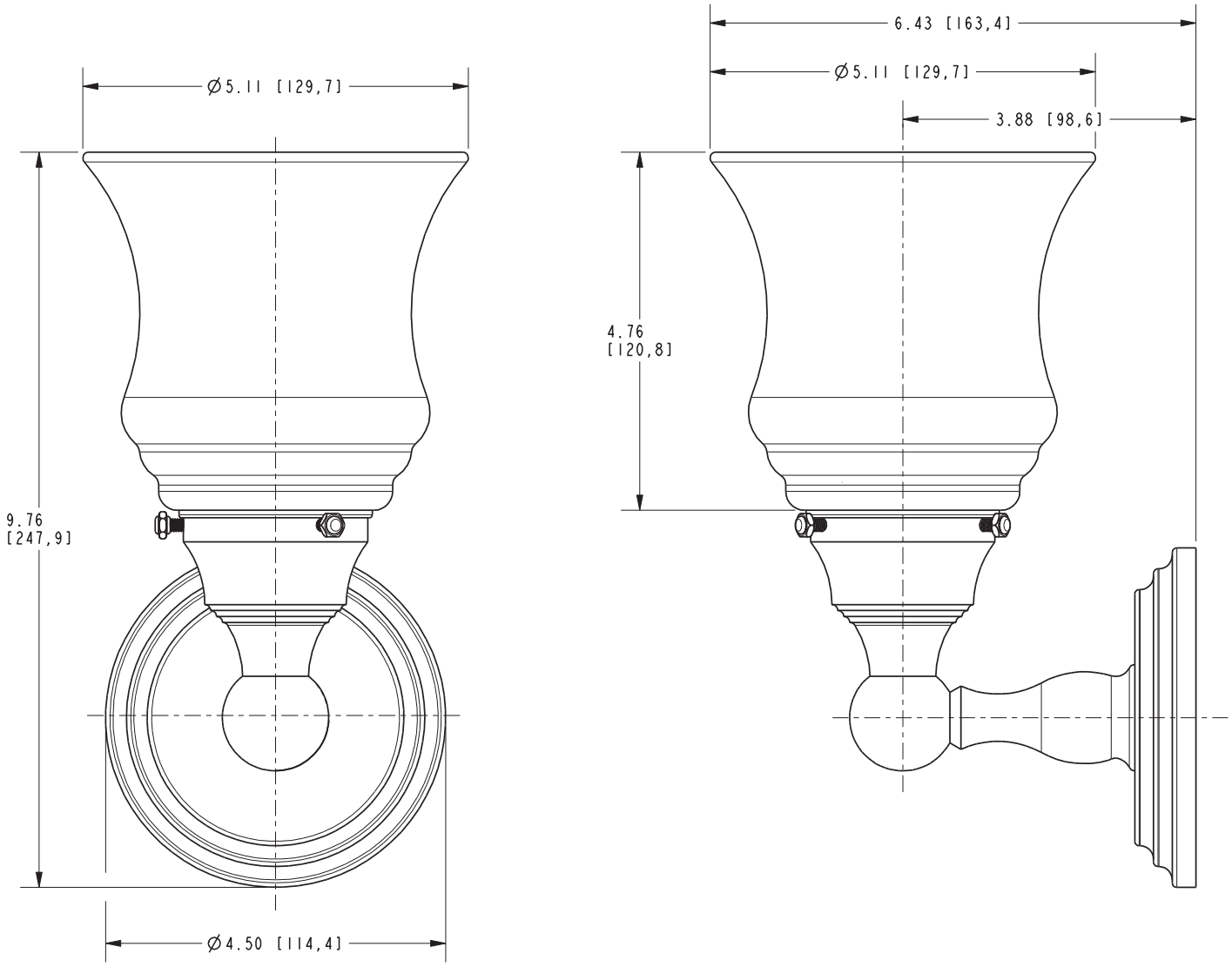

Chelsea Single Light
1182-1

GINGER

t: 949.417.5207 | www.gingerco.com
©2021 Brasstech, Inc.